





BUILT-OUT OFFICE SUITE | 3,270 RSF

2700 APPLE VALLEY RD | SUITE 67 | BROOKHAVEN GA 30319

CAPITAL REAL ESTATE GROUP

ASANA PARTNERS

SUITE 67 | 3,270 RSF



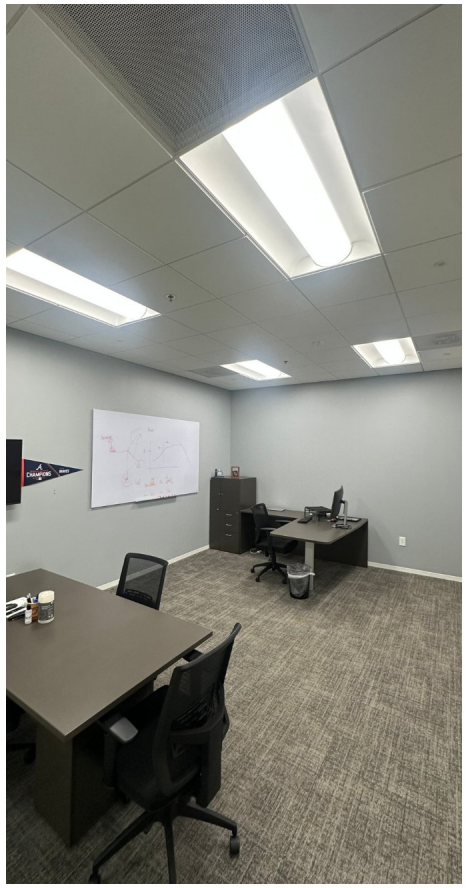

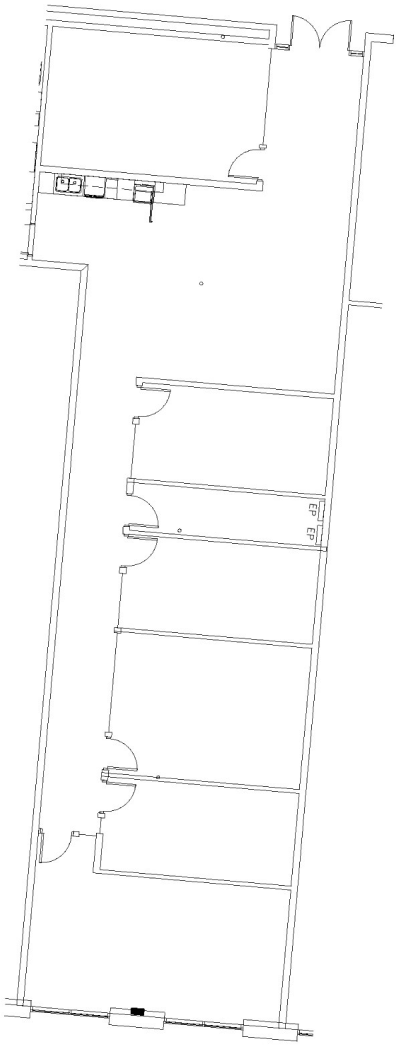



KEY PLAN

LAYOUT

2 Conference Rooms

4 Private Offices

Open Area

Break Room

SCHEDULE A TOUR TODAY BY CONTACTING:

ELLIS MURRAY
404.400.6633
ellis.murray@capitalre.com

BENNETT GOTTLIEB
404.400.7192
bennett.gottlieb@capitalre.com

JOHN P. THORNTON
404.400.7451
john.thornton@capitalre.com

2700
APPLE VALLEY RD
SUITE 67

CAPITAL REAL ESTATE GROUP

ASANA PARTNERS